GEO STREET

AWARD-WINNING MODULAR STREETLIGHT

Building on over a decade of proven performance in Nordic installations, GEO Street represents an evolution in street lighting design—engineered to balance urban infrastructure demands with lifecycle sustainability.

Street lighting directly impacts both municipal energy consumption and the quality of public space. GEO addresses both through its minimalist Scandinavian form and intelligent modular construction. Available in M and L configurations, the system adapts to varied urban and rural contexts—from primary streets to parks, pathways, and residential zones.

GEO's defining feature is its rear-mounted electronics panel, accessible without tools. Routine maintenance or technology upgrades affect only 20% of the luminaire, leaving the connections intact. This extends operational life, reduces waste, and lowers total cost of ownership.

Each luminaire can be field-configured to meet regional photometric standards, climatic requirements, and site-specific conditions. GEO integrates readily with smart city infrastructure—from traffic monitoring to centralized energy management systems.

Built to meet stringent EU environmental and performance standards, GEO delivers uniform, energy-efficient illumination with reduced maintenance intervals. From urban thoroughfares to rural access roads, it provides a future-ready platform for long-term lighting infrastructure.

GEO STREET M

GEO STREET M TECHNICAL INFO

Lightholm

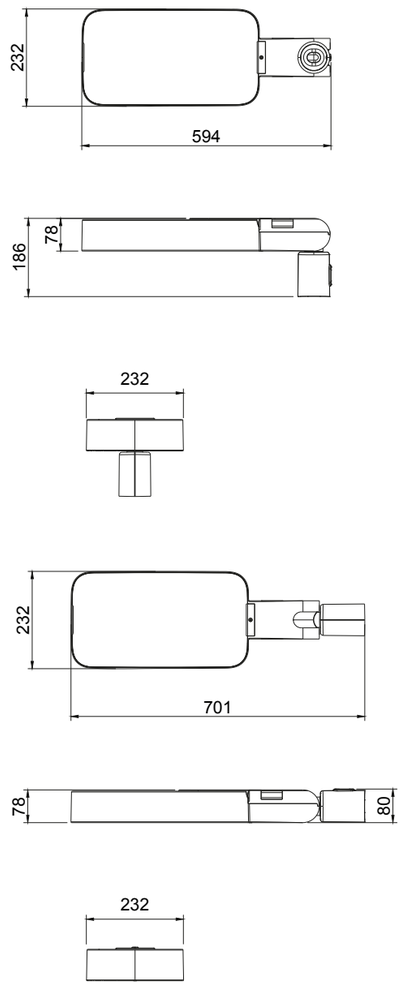

IP66 IK09 WARRANTY 5 EPD

Description	Values
Power	10 W – 70 W
Luminous flux	1 450 – 11 860 lm
Efficacy	Up to 180 lm/W
Correlated color temperature	2700 K, 3000 K, 4000 K (others on request)
CRI	Ra 70 (80, 90 optional)
Light source	Integrated LED module
Housing	Die-cast aluminium
Coating	Standard – C4 (Marine C5 on request)
RAL	RAL 9006 standard, other RAL on request
Material cover	Tempered glass
Screws	304 stainless screws
Driver	Tridonic / TCI / Signify / Inventronic
Electrical Class	Class I or Class II
Input voltage	198–264 V AC, 50–60 Hz
Surge protection	Up to 10kV (L/N - PE)
Functions	DALI-2, D4i, Chronostep
Connection	External cable (type and length vary by model or project requirements)
Installation bracket diameter	60 mm
Compatibility of pole diameters	48 mm / 60 mm
Lifetime	100 000 h (at 25 °C)
Ambient temperature	−40 °C to +40 °C
IP Rating	IP66
IK Rating	IK09
Weight	7,8 kg
Certificates	CE, UKCA, ENEC, ENEC+, EPD
Warranty	5 years

** - depends on type of the surge*

For specifications visit www.Lightholm.com

GEO STREET L

GEO STREET L TECHNICAL INFO

Lightholm

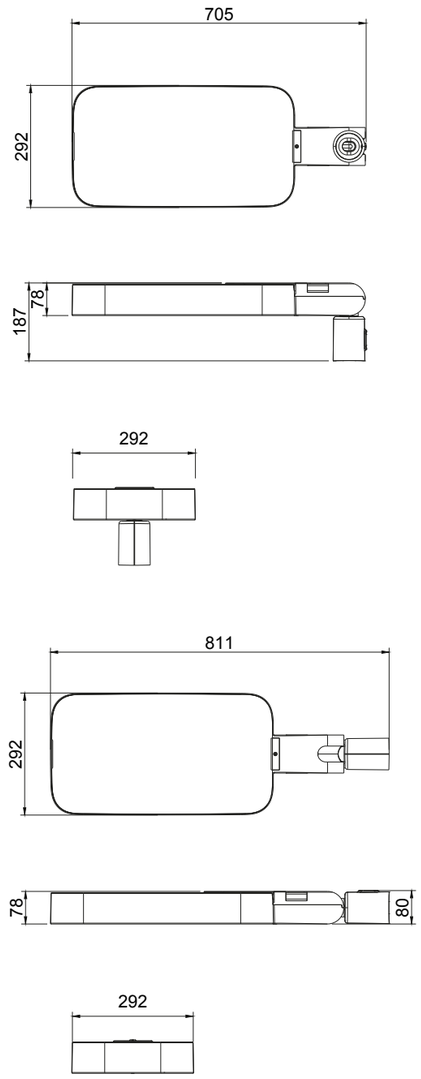

IP66 IK09 WARRANTY 5 EPD

Description	Values
Power	60 W – 120 W
Luminous flux	10 660 – 16 990 lm
Efficacy	Up to 180 lm/W
Correlated color temperature	2700 K, 3000 K, 4000 K (others on request)
CRI	Ra 70 (80, 90 optional)
Light source	Integrated LED module
Housing	Die-cast aluminium,
Coating	Standard – C4 (Marine C5 on request)
RAL	RAL 9006, other RAL on request
Material cover	Tempered glass
Screws	304 stainless screws
Driver	Tridonic / TCI / Signify / Inventronics
Electrical Class	Class I or Class II
Input voltage	198–264 V AC, 50–60 Hz
Surge protection	Up to 10kV (L/N - PE)
Functions	DALI-2, D4i, Chronostep
Connection	External cable (type and length vary by model or project requirements)
Installation bracket diameter	60 mm
Compatibility of pole diameters	48 mm / 60 mm
Lifetime	100 000 h (at 25 °C)
Ambient temperature	−40 °C to +40 °C
IP Rating	IP66
IK Rating	IK09
Weight	11,1 kg
Certificates	CE, UKCA, ENEC, ENEC+, EPD
Warranty	5 years

** - depends on type of the surge*

For specifications visit www.Lightholm.com

GEO STREET L AND M OPTICS

Lightholm

F414

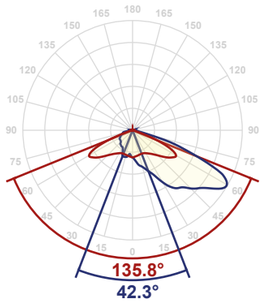

F411

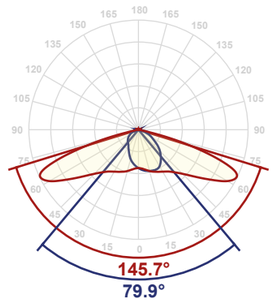

CROSSING I;R (E0445 / E0466)

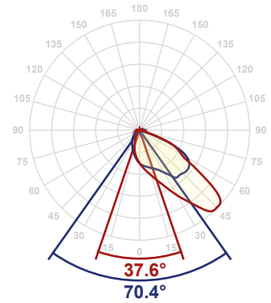

E0422 (ME)

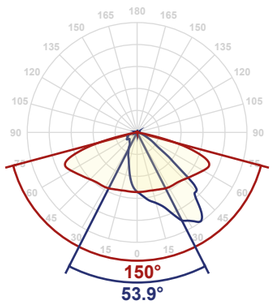

F402

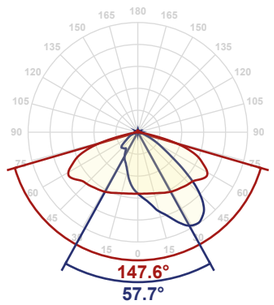

Contact us for more optical versions

F414	Area lighting
F411	Lighting for narrow roads with excellent edge illumination. Pavements and cycle paths
CROSSING	Pedestrian crossings
E0422 (ME)	Street lighting with very high longitudinal lighting uniformity
F402	Street lighting with very high longitudinal lighting uniformity with alternating pole arrangements