GEO FL L
Installation manual

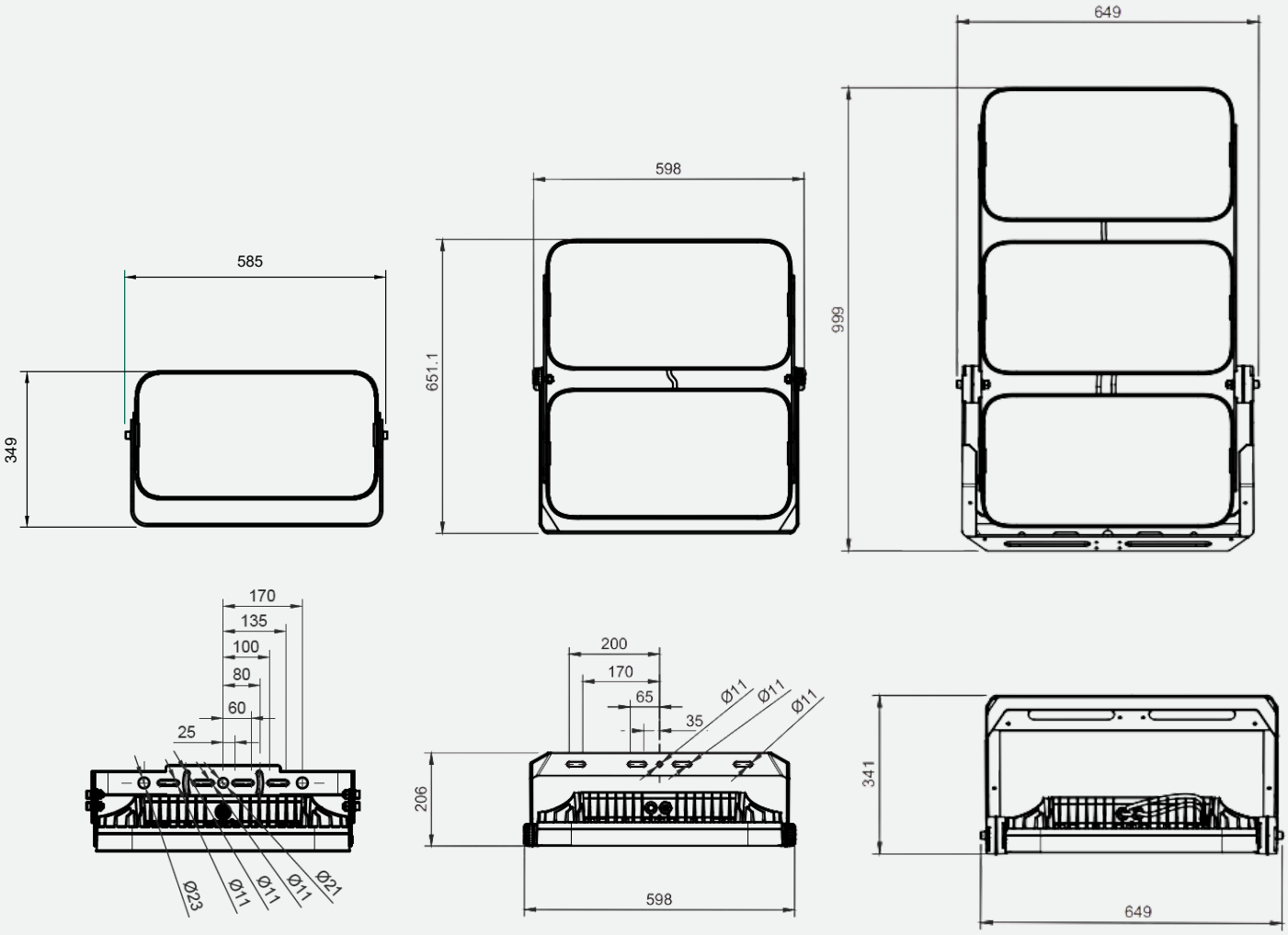

CE | LED | IP66 | IK08 | CRI >70 | 4000K | C | D

	GEO FL L 1M	GEO FL L 2M	GEO FL L 3M
Luminous flux	15770 - 65350 lm	up to 126800 lm	up to 208500 lm
Consumption	140 - 400 W	up to 800 W	up to 1350 W
Input voltage	AC100-240V 50/60 Hz		
Wind area min/max	0.034 m^2/0.157 m^2	0.074 m^2/0.314 m^2	0.074 m^2/0.471 m^2
Dimensions	585 x 349 x 184 mm	598 x 651 x 119 mm	649 x 999 x 341 mm
Net weight	17.5 kg	38.5 kg (28.5 kg EXT)	44.2 kg
Ambient humidity range	10%~90%RH		

GEO FL L

Service QR tag

The luminaire is provided with three service tags. One is mounted in the luminaire housing. One should be mounted behind the pole door. One should be attached to the documentation.

Wiring diagram

Phase	2
Neutral	1
Earth	yellow & green

*NOTE! Ground connection applies to protection class I luminaires.

Warning, risk of electric shock.

Alternative wiring diagram

Phase	brown
Neutral	blue
Earth	yellow & green

*NOTE! Ground connection applies to protection class I luminaires.

Warning, risk of electric shock.

SAFETY AND INSTALLATION INSTRUCTIONS Read these instructions carefully before commencing installation and retain for future reference. The luminaire should be installed by a licensed electrician and in accordance with local regulations. Make sure that the power is off before installation or maintenance. Install as describedin this manual. **To maximize life span, install the luminaires and the drivers as far away from heat sources as possible and in a well ventilated area.** Use the supplied cable and driver for best function and safety.

NOTE: The light source in this luminaire may only be replaced by the manufacturer or by qualified personnel designated by the manufacturer. Never regulate the power on the secondary side, this can damage or destroy the LED.Faulty installation may void warranty. When installing in wet areas, the driver must be placed in a dry zone.

GEO FL L

2M EXT Wiring diagram

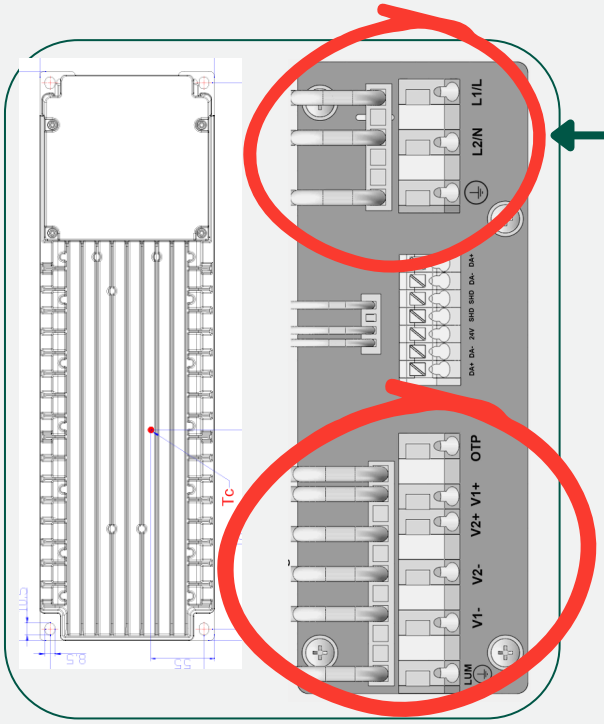

~230 VAC

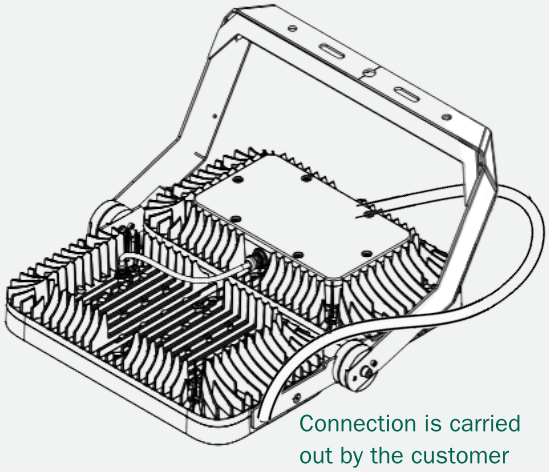

Connection is carried out by the customer

* 5x1.5 mm² cable provided by customer if driver is mounted on mast.

V1-	1
V1+	2
V2-	3
V2+	4
GND	yellow & green

3M EXT Wiring diagram

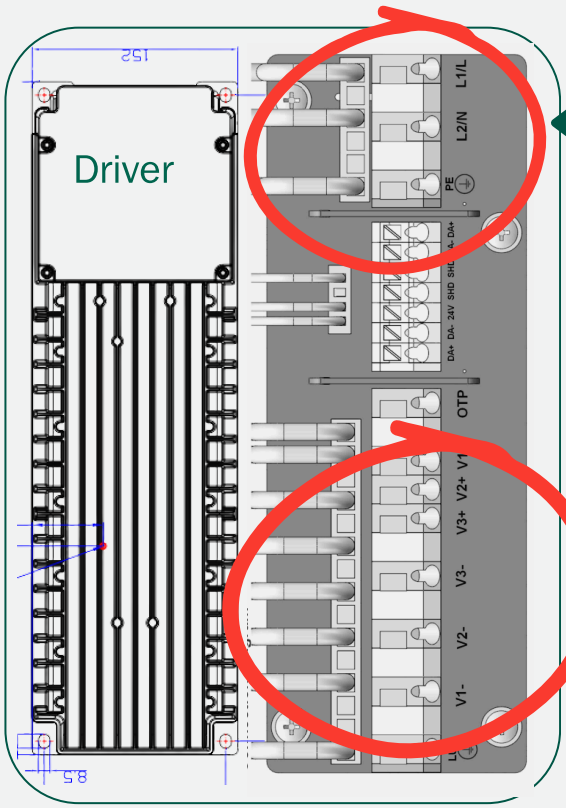

~230 VAC

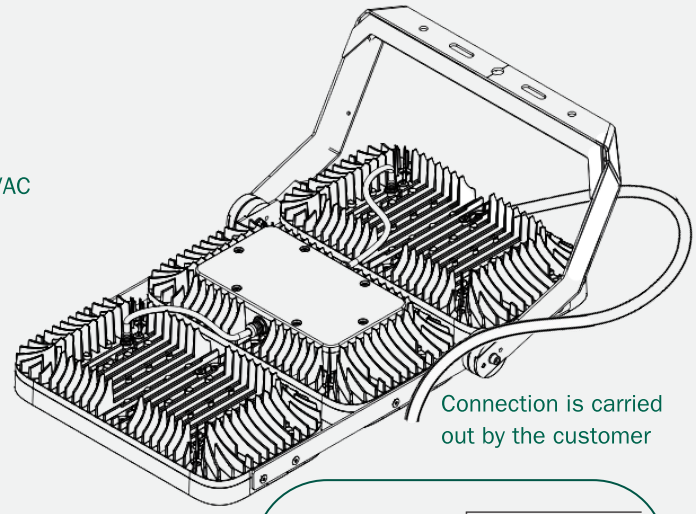

Connection is carried out by the customer

* 7x1.5 mm² cable provided by customer if driver is mounted on mast.

V1-	1
V1+	2
V2-	3
V2+	4
V3-	5
V3+	6
GND	yellow & green

GEO FL L

The holder options

Geo FL L 1M	Area	Industrial holder
Geo FL L 2M	Area	Area holder
Geo FL L 2M	Sport	Sport holder
Geo FL L 3M	Area / Sport	Sport holder

Industrial holder

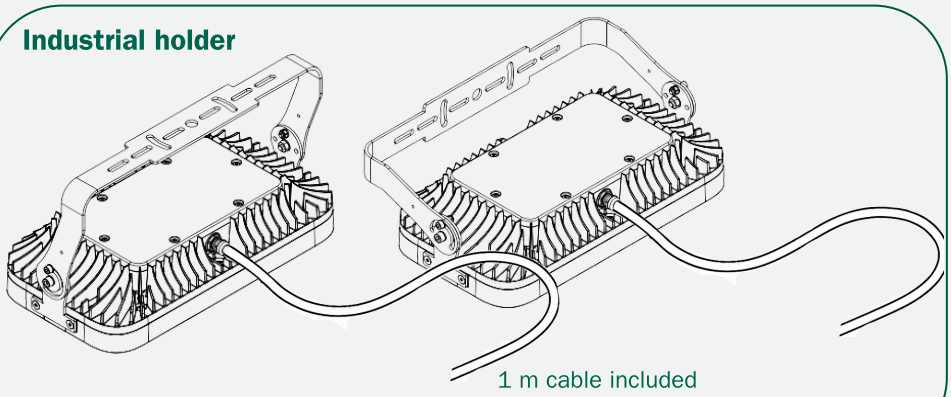

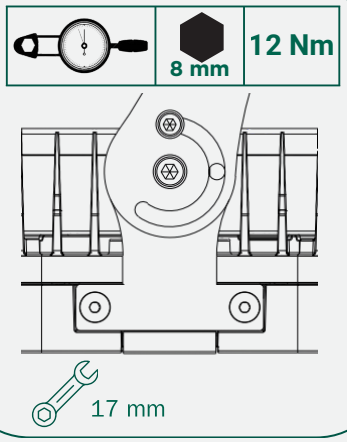

2M AREA holder

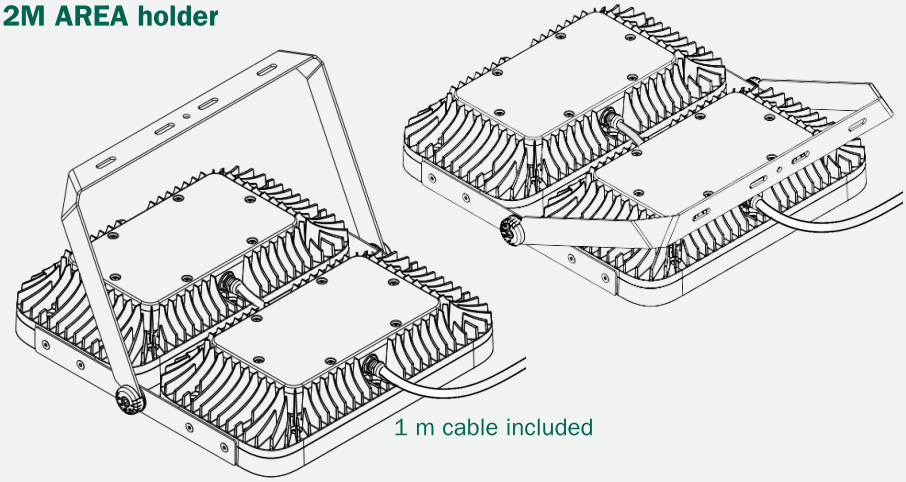

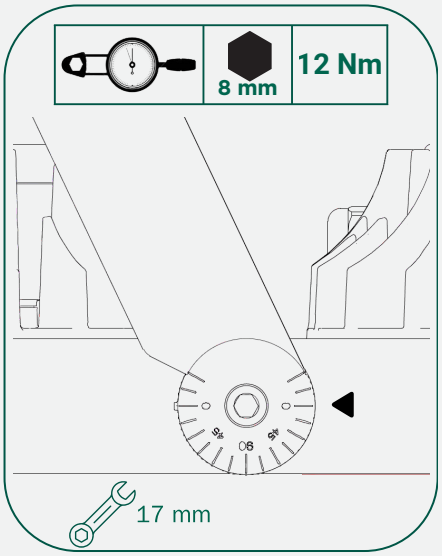

2M Sport holder

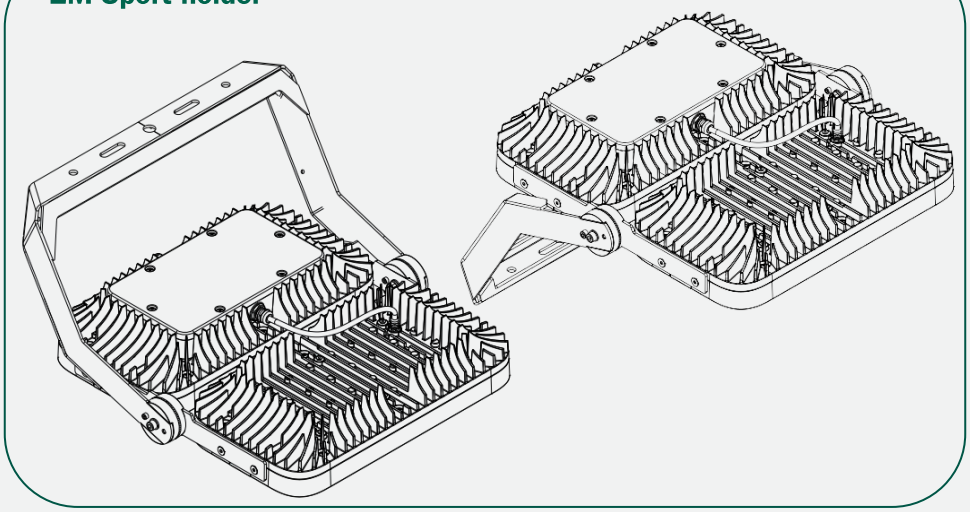

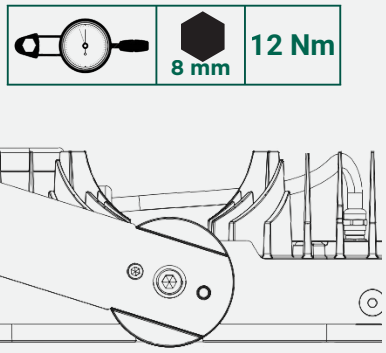

GEO FL L

3M Sport holder

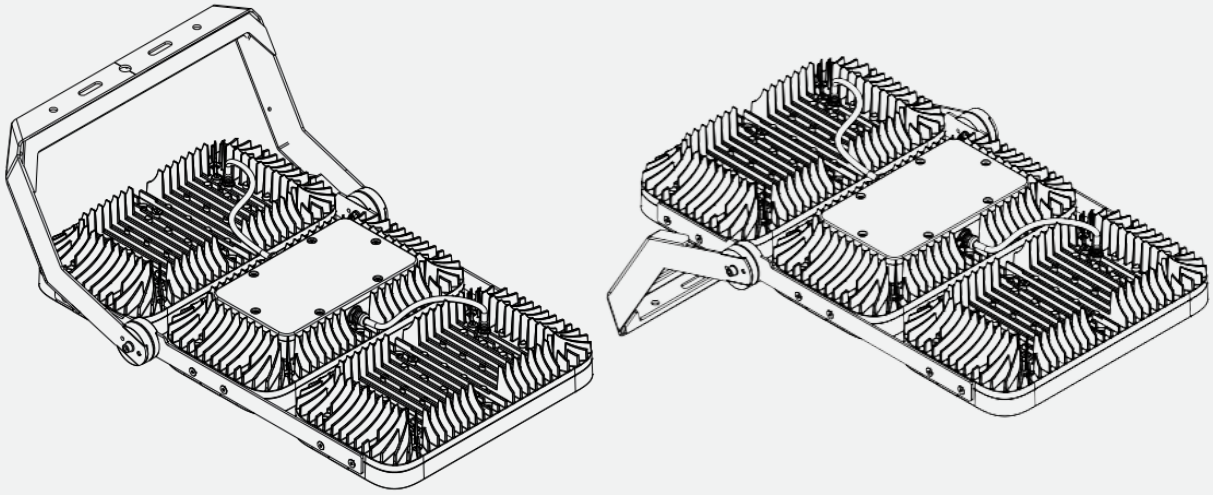

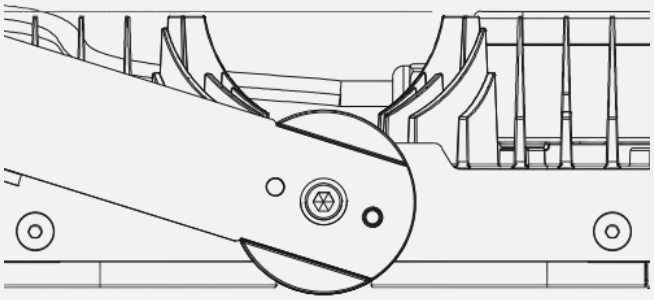

GEO FL L

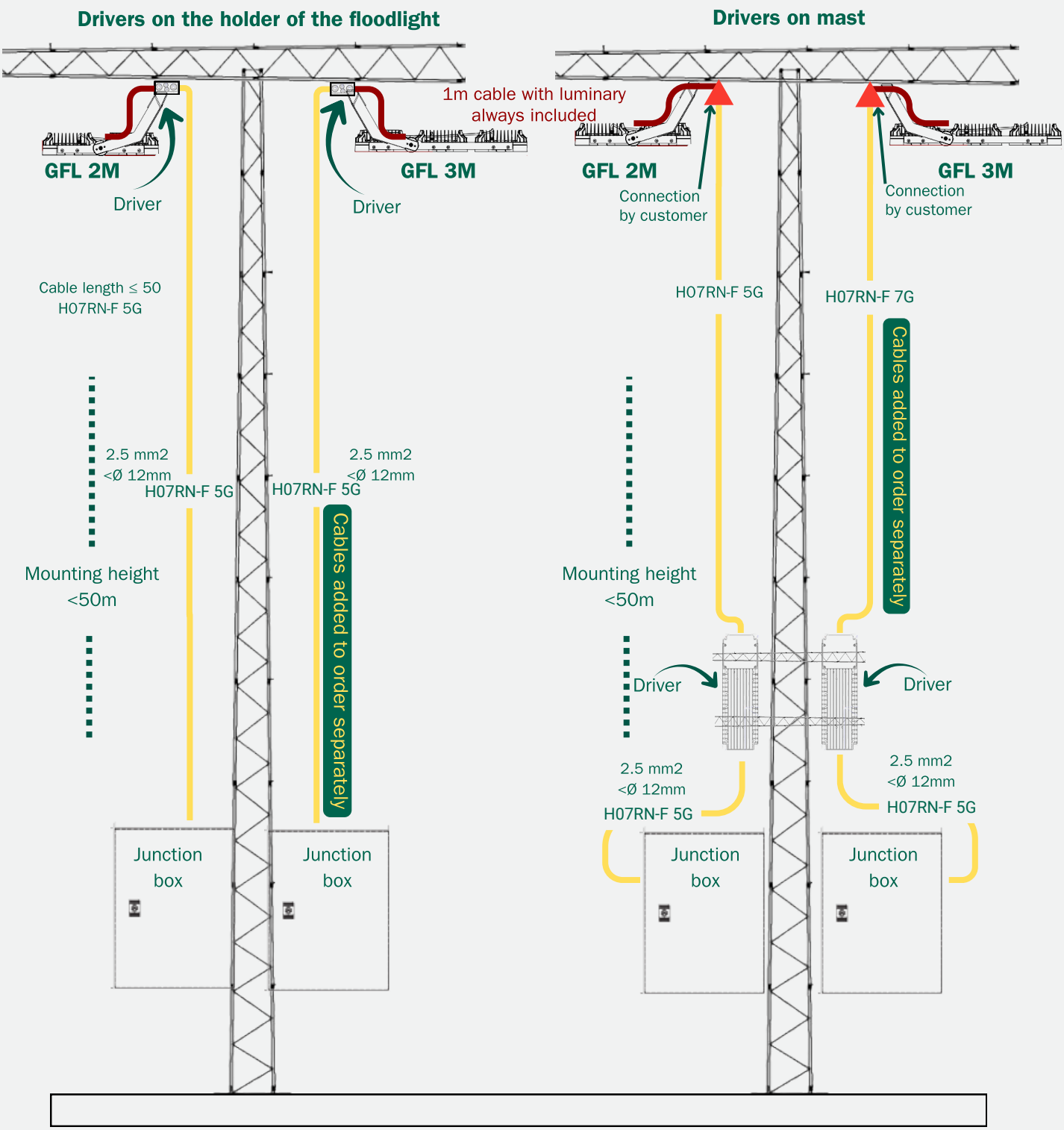

Junction box includes driver box and original AFA02R5
Junction box does not include installation brackets